宇航橡胶
YuHang Rubber
RUBBER

南京宇航橡胶有限公司
NANJING YUHANG RUBBER CO.LTD

Manufacturers · Designers · Distributors

PVC Self-Grip Edge Trim - 10.5mm x 14.3mm

Product Code: RCET10.5X14.3L

Material: PVC, Steel

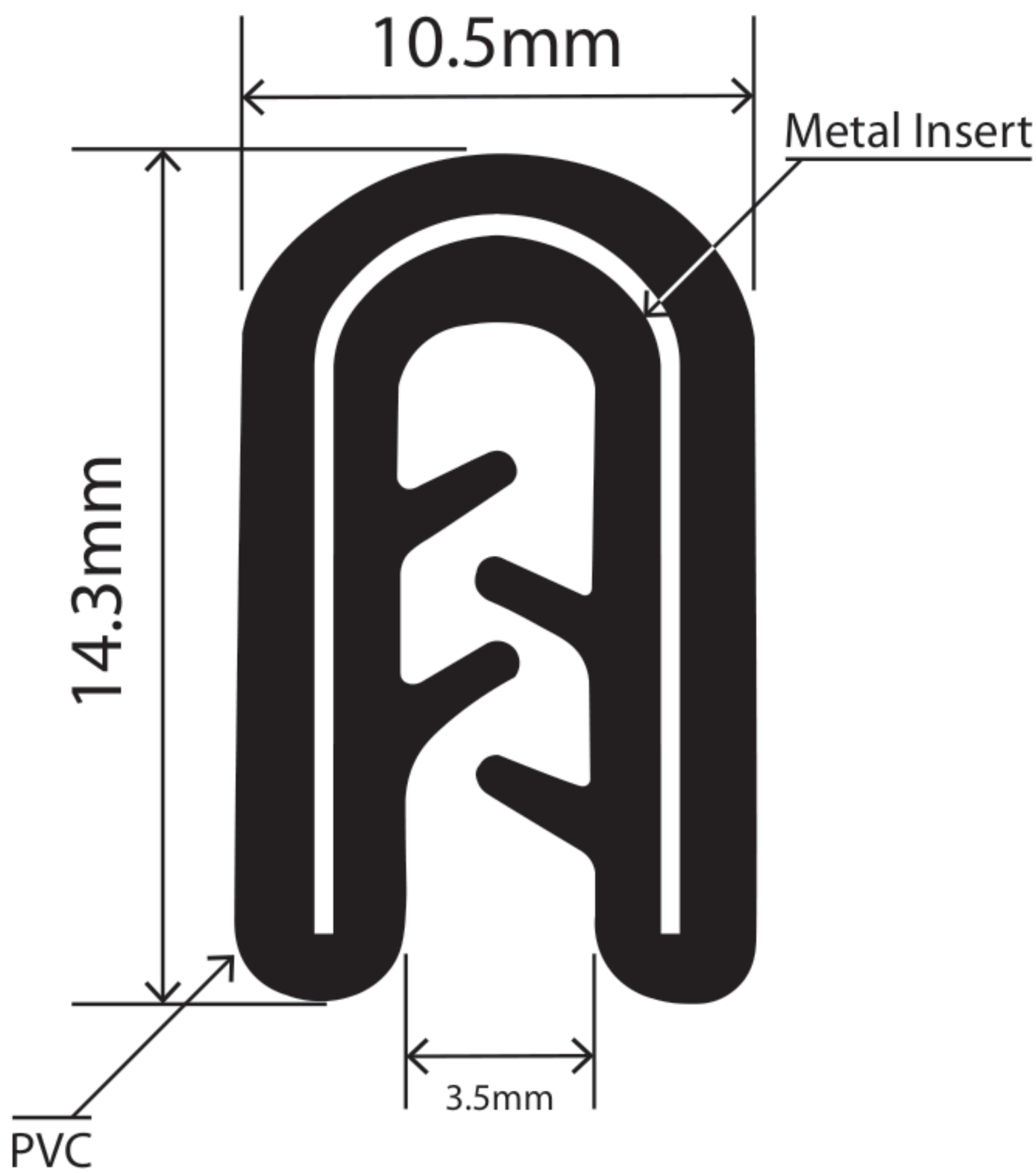

Measurements:

Height	Width	To Fit Panel
14.3mm	10.5mm	1.5mm - 3mm

The information contained on this product information sheet is to be used as guidance. The advice is given in good faith and does not constitute any guarantee or recommendation for suitability. The Rubber Company cannot be held liable for any damage caused by incorrect installation. We hereby reserve the right to change the technical information herewith without notification or prior agreement.

E-mail: sales@rubbermanufact.com Http://www.rubbermanufact.com TeL:+86 18005162255

Nanjing YuHangrubber company limited in China Jiangshu

Material Description

PVC (also known as polyvinyl chloride) is an incredibly popular and versatile material, that has been widely produced for more than 55 years. There are many advantages to manufacturing from PVC as it is an incredibly stable material. It provides excellent resistance against weathering deterioration, it does not corrode, it is very hard to burn, and it does not de-polymerize.

PVC is commonly used in construction, medicine (instruments), and packaging applications. There is a difference to be made between hard PVC, which is used in pipes, and in profiles for windows and borders (ratio of PVC 77/89%), and soft PVC, which is used in insulation tubes, flooring, and edge protection profiles (ratio of 44-61%).

Material Specification

Property	Value
Polymer	PVC
Hardness (Shore A)	70° +/- 3°
Density (Specific Gravity)	1.40 g/cm^3
Tensile Strength	>11.0 MPa
Elongation at Break	260%
Operating Temperature Range	-25°C to +75°C

Steel or Wire Insert

By using either a steel or wire carrier, the edge trim profiles will grip well without the use of splicing tape. However, the use of a steel carrier will have a greater clamping effect than a wire carrier.

The disadvantage of a profile with an unbroken steel carrier is a restricted bending radius over the lateral blade. This can be solved by breaking the connecting bridges. However, a slightly uneven strand may develop if this is done. In most technical applications, the appearance will be irrelevant.

QMS ISO 9001 : 2015 REGISTERED

The information contained on this product information sheet is to be used as guidance. The advice is given in good faith and does not constitute any guarantee or recommendation for suitability. The Rubber Company cannot be held liable for any damage caused by incorrect installation. We hereby reserve the right to change the technical information herewith without notification or prior agreement.