宇航橡胶
YuHang Rubber
RUBBER

南京宇航橡胶有限公司
NANJING YUHANG RUBBER CO.LTD

Manufacturers · Designers · Distributors

TPE Square U Channel - 18.5mm x 15mm
Product Code: RC4300

Material: TPE

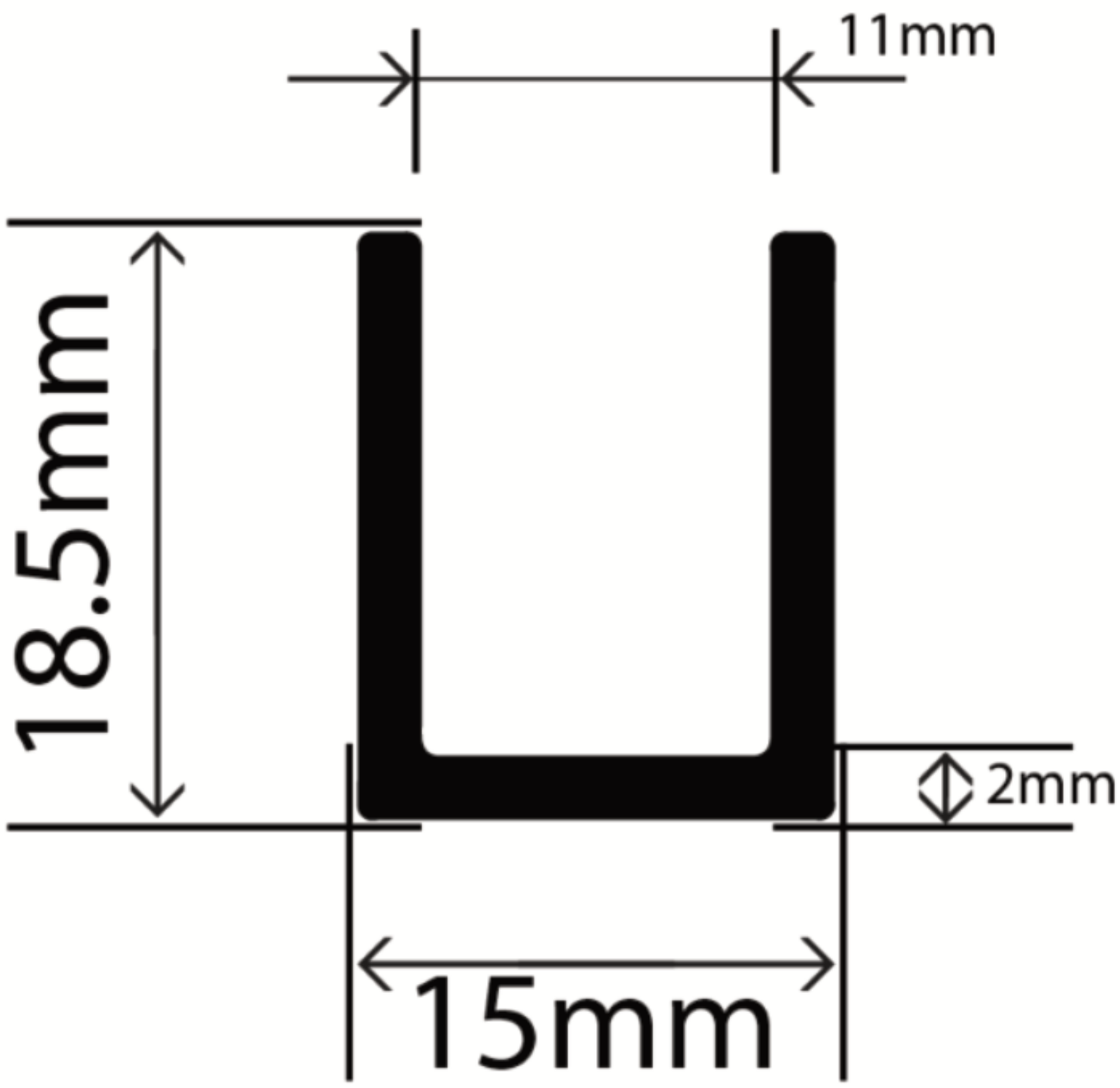

Measurements:

Height	Width
18.5mm	15mm

The information contained on this product information sheet is to be used as guidance. The advice is given in good faith and does not constitute any guarantee or recommendation for suitability. The Rubber Company cannot be held liable for any damage caused by incorrect installation. We hereby reserve the right to change the technical information herewith without notification or prior agreement.

E-mail: sales@rubbermanufact.com Http://www.rubbermanufact.com TeL:+86 18005162255
Nanjing YuHangrubber company limited in China Jiangshu

Technical Data

Property	Test Method	Value
Shore Hardness	Shore A	67
Weight Per Metre	(gr)	118
Packaging Length	Metres	25
Minimum Operating Temperature	°C	-40
Maximum Operating Temperature	°C	+90
Sheet Thickness	mm	11.0
Minimum Bending Radius A	mm	-
Minimum Bending Radius B	mm	-
Minimum Bending Radius C	mm	-
Minimum Bending Radius D	mm	-
Bending Radius Thickness	mm	-

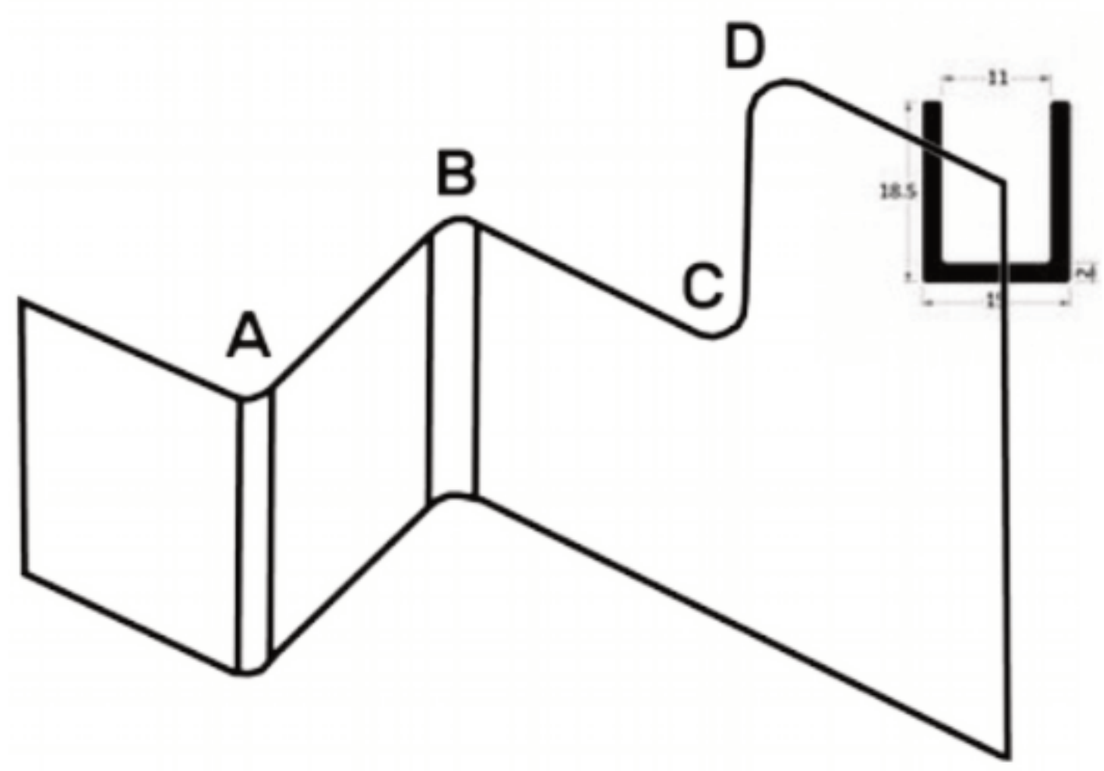

ISO 9001 : 2015 REGISTERED

The information contained on this product information sheet is to be used as guidance. The advice is given in good faith and does not constitute any guarantee or recommendation for suitability. The Rubber Company cannot be held liable for any damage caused by incorrect installation. We hereby reserve the right to change the technical information herewith without notification or prior agreement.

E-mail: sales@rubbermanufact.com Http://www.rubbermanufact.com TeL:+86 18005162255
Nanjing YuHangrubber company limited in China Jiangshu