TPE Expansion Seal Profiles

RCES1119

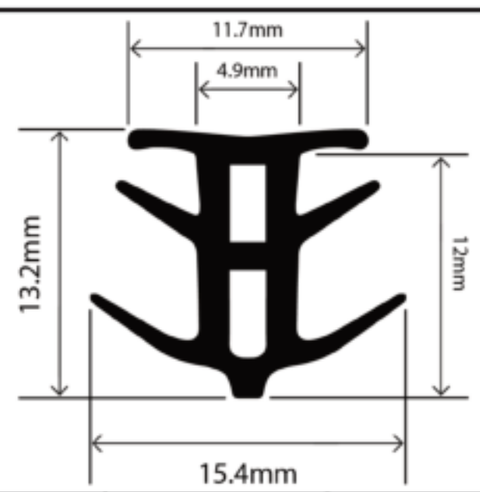

Width (mm)	Height (mm)	To Fit Groove (mm)
15.4	13.2	10 - 12.5

MOQ / Coil Length: 25m

RCES107

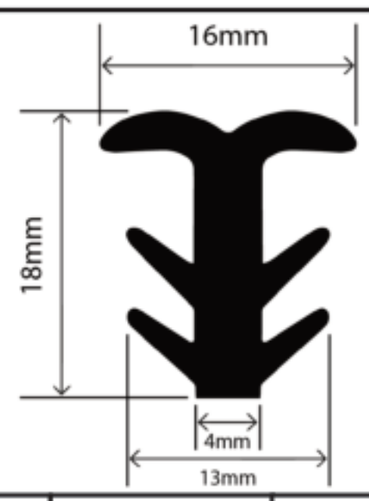

Width (mm)	Height (mm)	To Fit Groove (mm)
16	18	9 - 11

MOQ / Coil Length: 25m

RCES1439

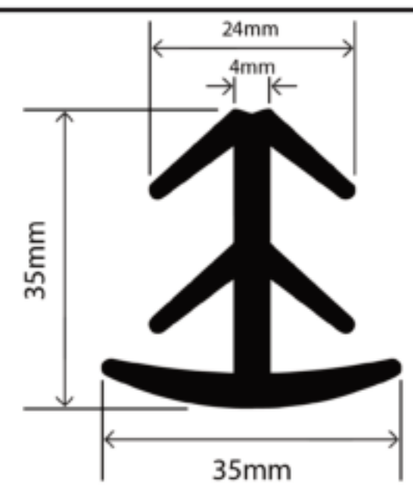

Width (mm)	Height (mm)	To Fit Groove (mm)
35	35	15 - 25

MOQ / Coil Length: 25m

RCES1054

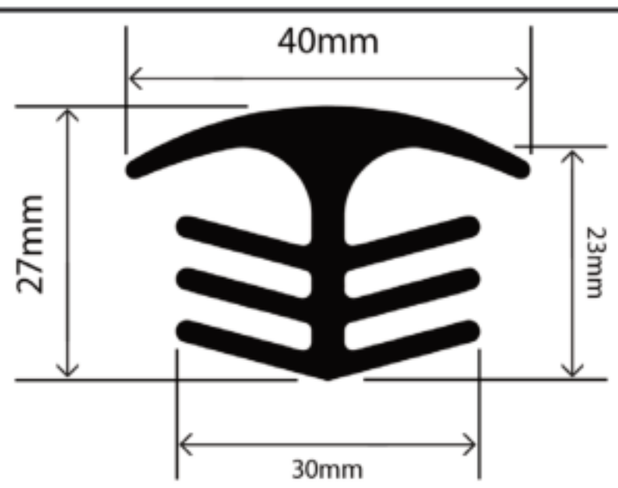

Width (mm)	Height (mm)	To Fit Groove (mm)
40	27	22 - 28

MOQ / Coil Length: 25m

RCES1317

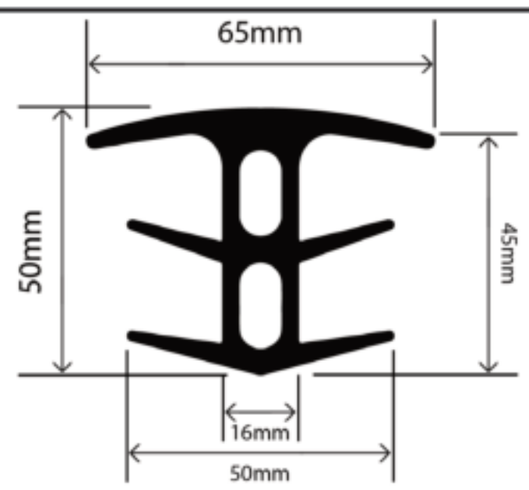

Width (mm)	Height (mm)	To Fit Groove (mm)
65	50	35 - 45

MOQ / Coil Length: 25m

RCES424

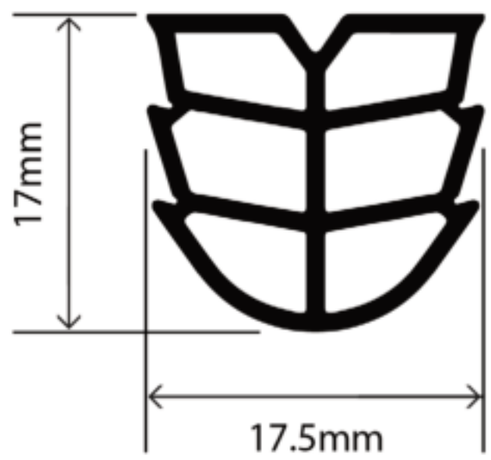

Width (mm)	Height (mm)	To Fit Groove (mm)
17.5	17	13 - 15

MOQ / Coil Length: 25m

RCES648B

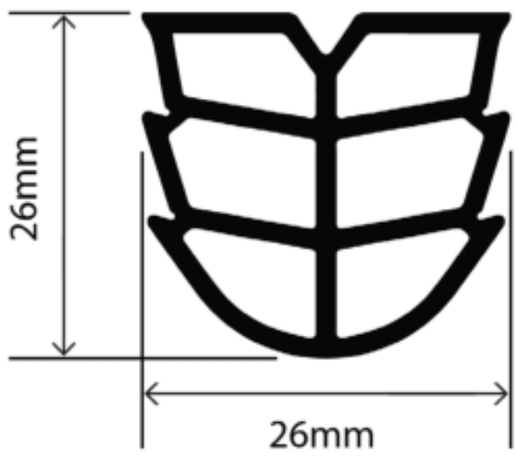

Width (mm)	Height (mm)	To Fit Groove (mm)
26	26	19 - 23

MOQ / Coil Length: 25m

RCES2186

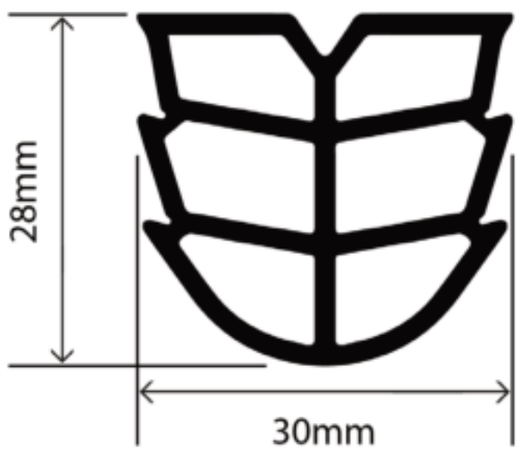

Width (mm)	Height (mm)	To Fit Groove (mm)
30	28	22 - 26

MOQ / Coil Length: 25m

RCES648

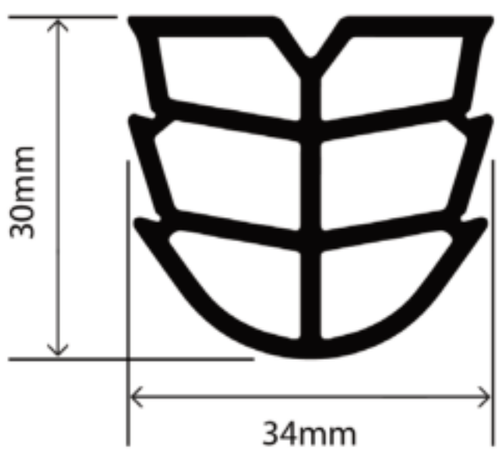

Width (mm)	Height (mm)	To Fit Groove (mm)
34	30	25 - 30

MOQ / Coil Length: 25m

E:sales@rubbermanufact.com W:www.rubbermanufact.com

The information contained on this product information sheet is to be used as guidance. The advice is given in good faith and does not constitute any guarantee or recommendation for suitability. The Rubber Company cannot be held liable for any damage caused by incorrect installation. We hereby reserve the right to change the technical information herewith without notification or prior agreement.

TPE Expansion Seal Profiles

RCES2695

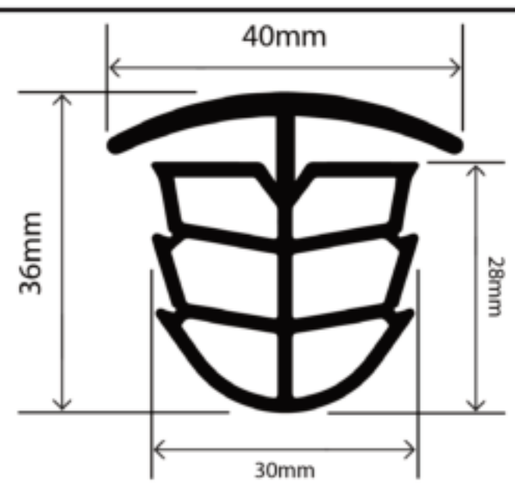

Width (mm)	Height (mm)	To Fit Groove (mm)
40	36	15 - 25

MOQ / Coil Length: 25m

RCES864

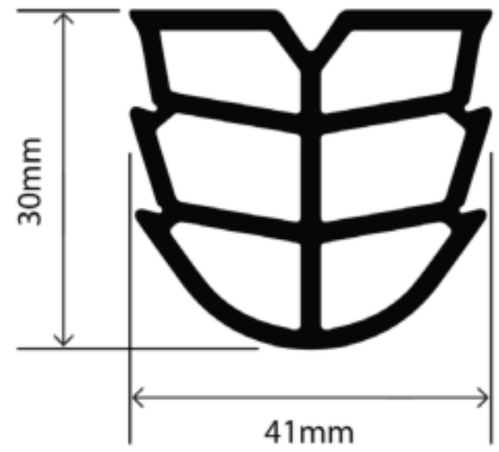

Width (mm)	Height (mm)	To Fit Groove (mm)
41	30	30 - 35

MOQ / Coil Length: 25m

RCES1000

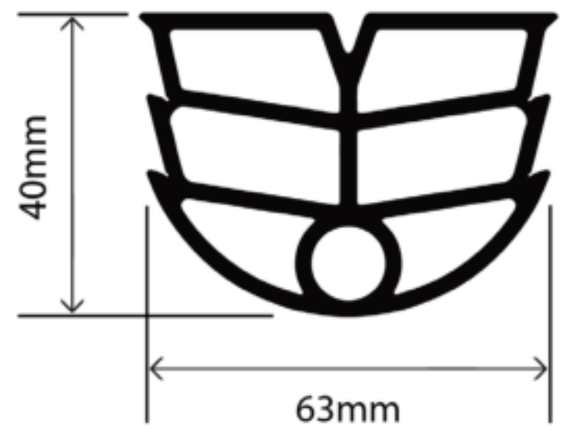

Width (mm)	Height (mm)	To Fit Groove (mm)
63	40	46 - 52

MOQ / Coil Length: 25m

RCES1861

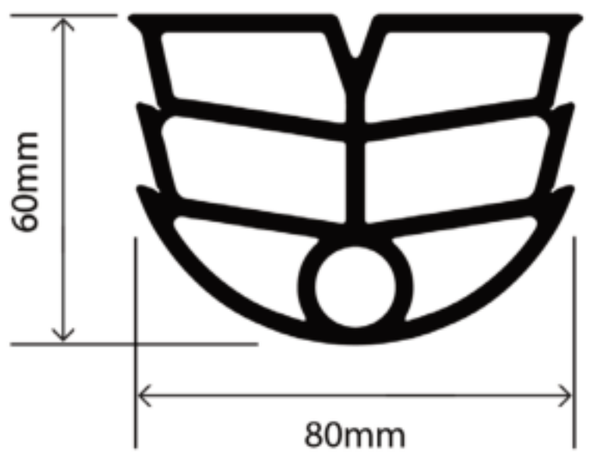

Width (mm)	Height (mm)	To Fit Groove (mm)
80	60	60 - 75

MOQ / Coil Length: 25m

E:sales@rubbermanufact.com
W:www.rubbermanufact.com

The information contained on this product information sheet is to be used as guidance. The advice is given in good faith and does not constitute any guarantee or recommendation for suitability. The Rubber Company cannot be held liable for any damage caused by incorrect installation. We hereby reserve the right to change the technical information herewith without notification or prior agreement.