Silicone Keyhole Seal Profiles

RCSK7X11S

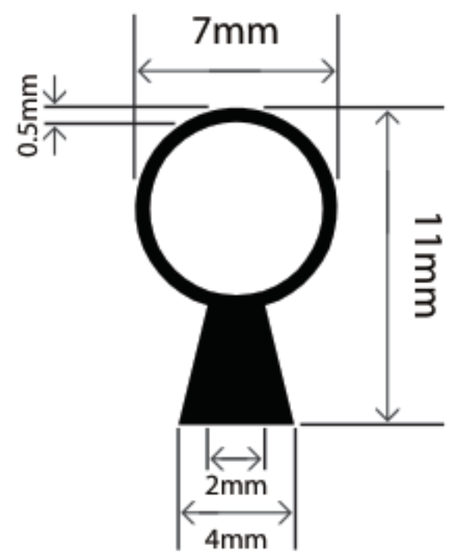

Width (mm)	Height (mm)
7	11

RCSK10X10S

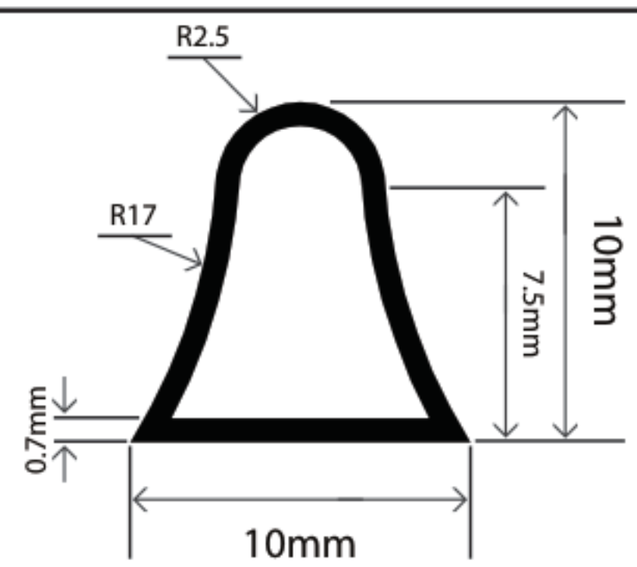

Width (mm)	Height (mm)
10	10

RCSK17.7X14.5S

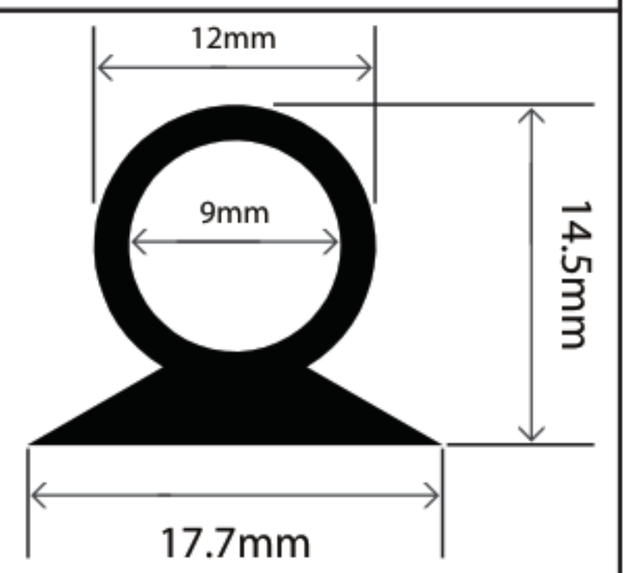

Width (mm)	Height (mm)
17.7	14.5

RCSK28.2X22.5S

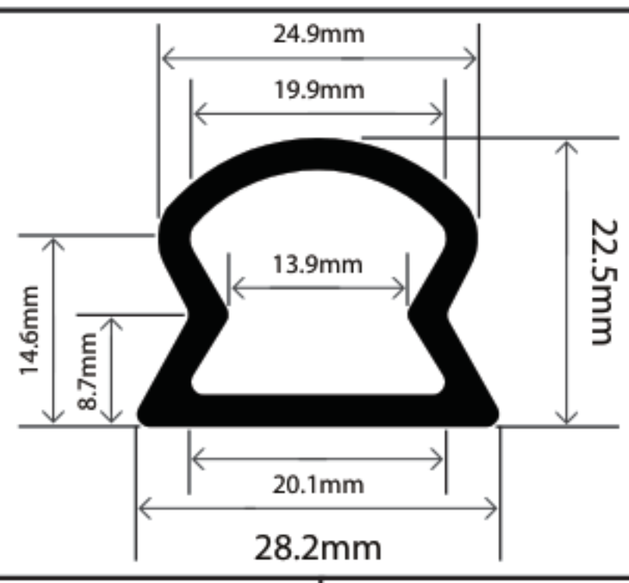

Width (mm)	Height (mm)
28.2	22.5

E-mail: sales@rubbermanufact.com Http://www.rubbermanufact.com TeL:+86 18005162255
Nanjing YuHangrubber company limited in China Jiangshu