Silicone E Seal Profiles

RCSES4.6X8.1S

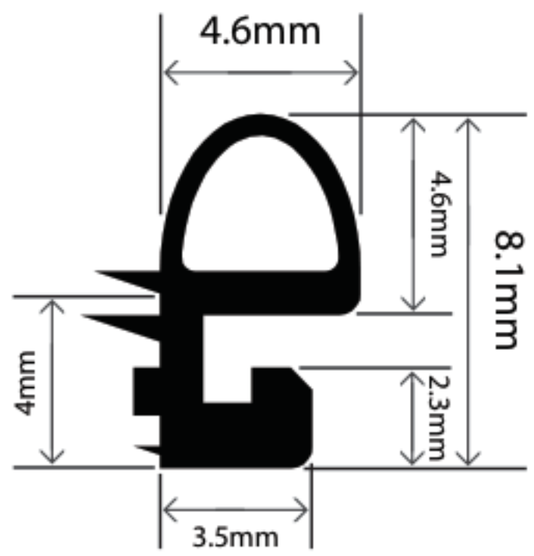

Width (mm)	Height (mm)
4.6	8.1

RCSES10X11S

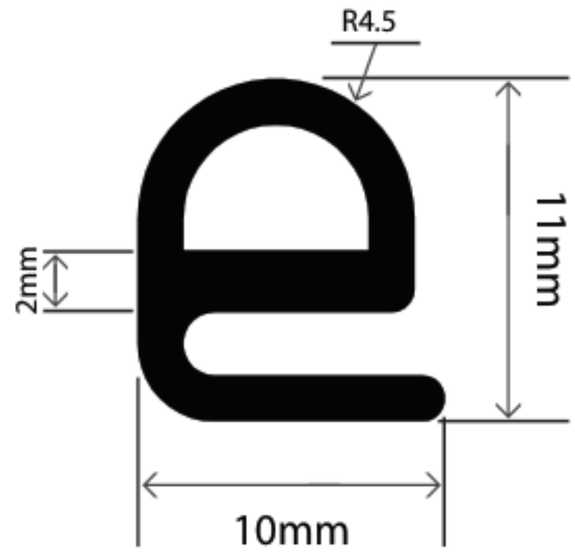

Width (mm)	Height (mm)
10	11

RCSES11.7X34S

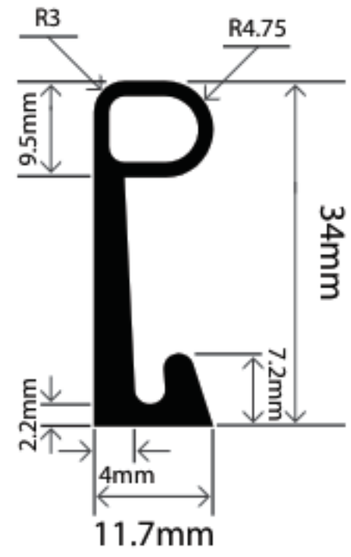

Width (mm)	Height (mm)
11.7	34

RCSES17.5X9.5S

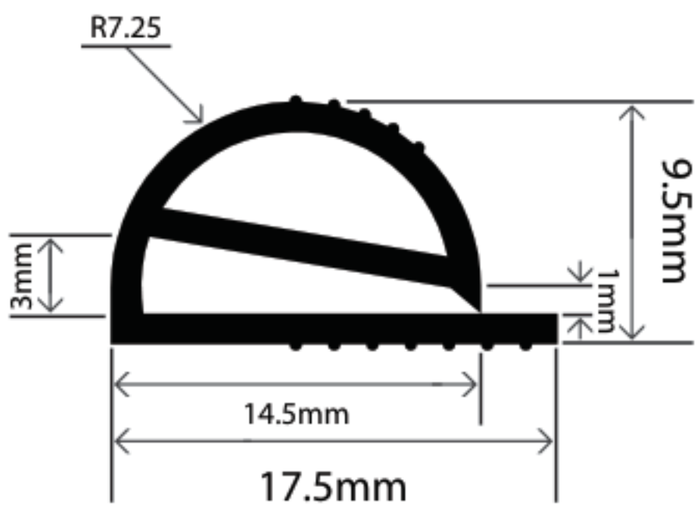

Width (mm)	Height (mm)
17.5	9.5

RCSES17.5X13.5S

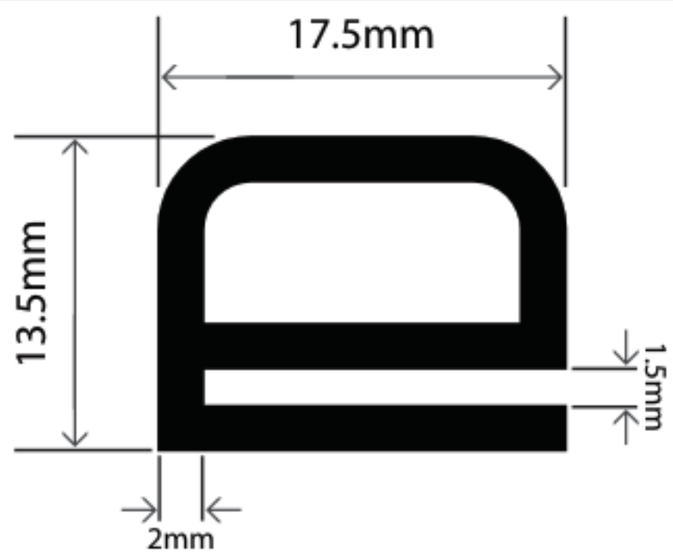

Width (mm)	Height (mm)
17.5	13.5

RCSES17.5X17S

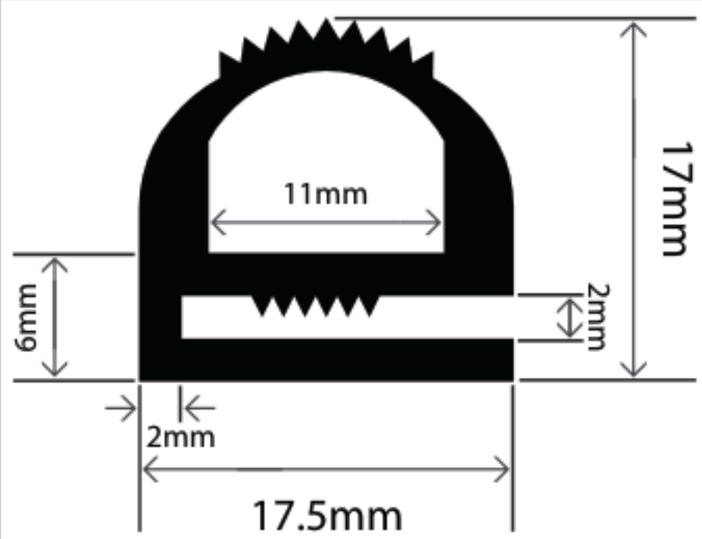

Width (mm)	Height (mm)
17.5	17

RCSES18.5X15S

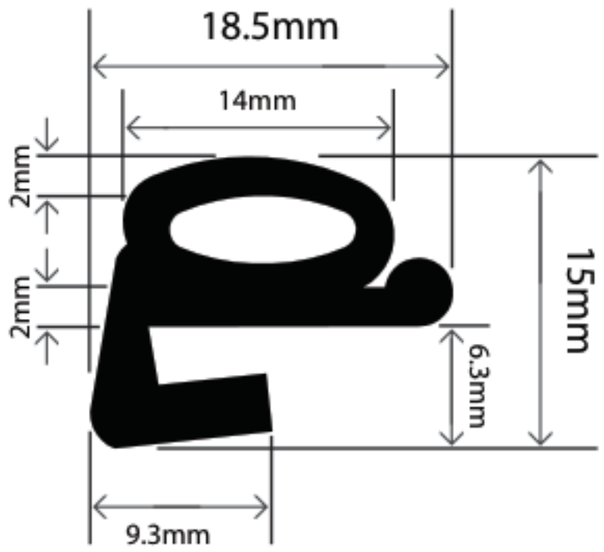

Width (mm)	Height (mm)
18.5	15

RCSES20X33.6S

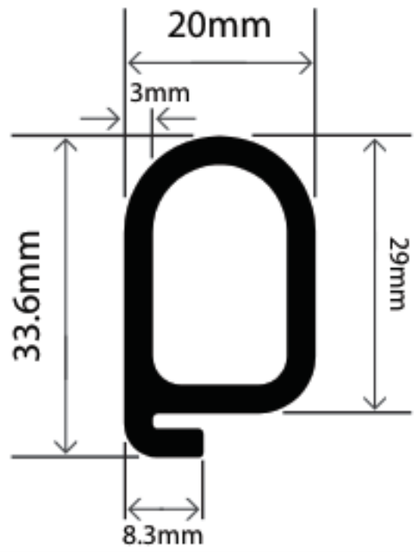

Width (mm)	Height (mm)
20	33.6

E-mail: sales@rubbermanufact.com Http://www.rubbermanufact.com TeL:+86 18005162255
Nanjing YuHangrubber company limited in China Jiangshu