宇航橡胶
YuHang Rubber
RUBBER

南京宇航橡胶有限公司
NANJING YUHANG RUBBER CO.LTD

Manufacturers · Designers · Distributors

Extruded Hatchseal Profile

Product Code: RC01113

Reference: RC38X20

Material: EPDM	Tolerance: BS 3734 Class E1 / E2

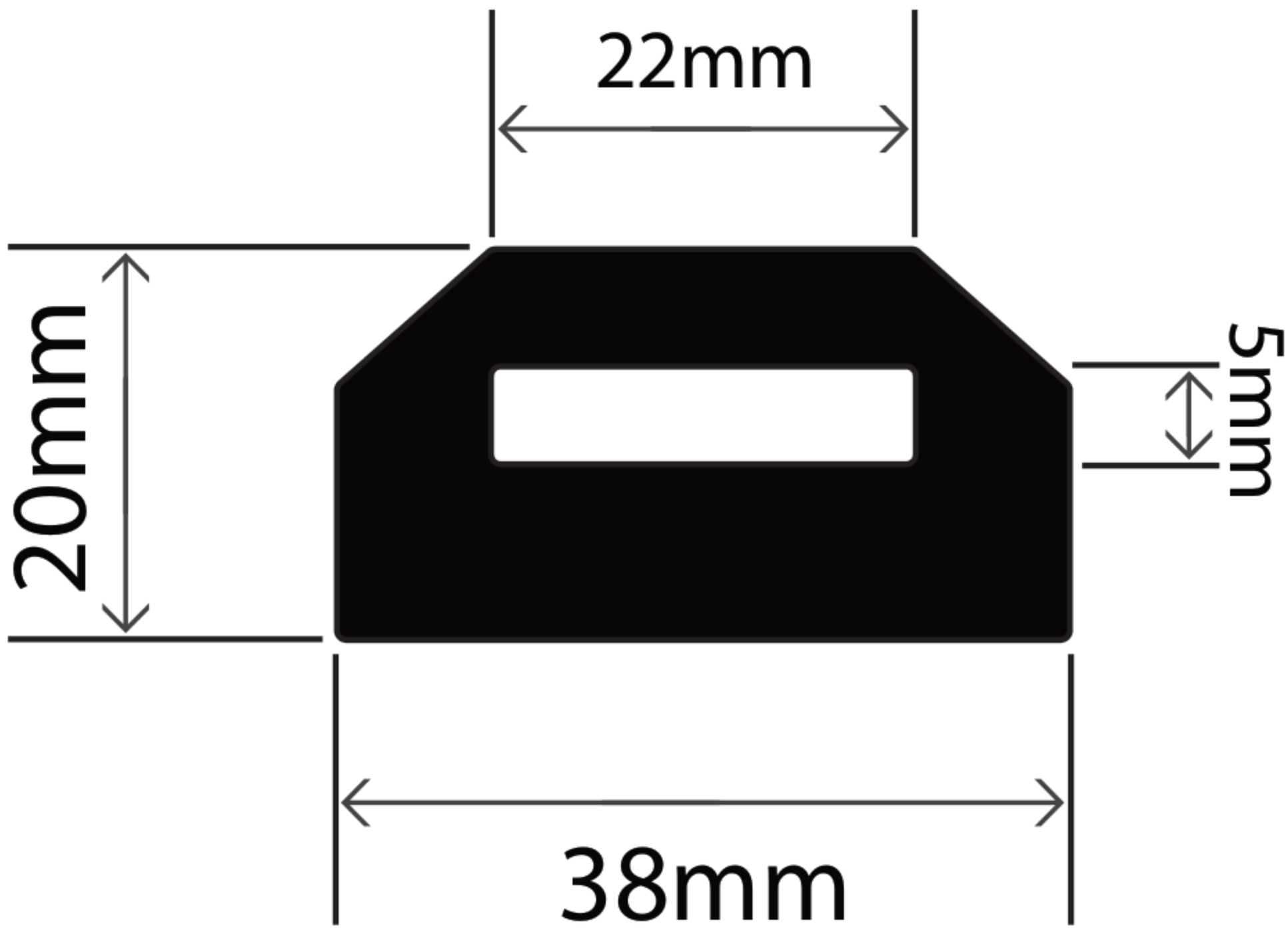

Measurements:

Height	Width
20mm	38mm

Other compounds are available on request subject to minimum order quantities.

The information contained on this product information sheet is to be used as guidance. The advice is given in good faith and does not constitute any guarantee or recommendation for suitability. The Rubber Company cannot be held liable for any damage caused by incorrect installation. We hereby reserve the right to change the technical information herewith without notification or prior agreement.

E-mail: sales@rubbermanufact.com Http://www.rubbermanufact.com TeL:+86 18005162255

Nanjing YuHangrubber company limited in China Jiangshu

Technical Data

Specification	Value
Material	70 IRHD EPDM
Density Range	ASTM D2000, 4AA, 707, A13, B33

Definition	Specification	Actual Value
Hardness	70 +/-5	73
Tensile Strength	7 Mpa min	10 Mpa
Elongation at break	400%	430%
Compression Set (70°C for 22 hours) %	35% max	28%
Heat Ageing (70 hours @ 100°C)		
Change in Tensile	-25% max	-18%
Change in Elongation	-25%	-18%
Change in Hardness	+10 max	+7
Ozone	No cracks	Pass

ISO 9001 : 2015 REGISTERED

The information contained on this product information sheet is to be used as guidance. The advice is given in good faith and does not constitute any guarantee or recommendation for suitability. The Rubber Company cannot be held liable for any damage caused by incorrect installation. We hereby reserve the right to change the technical information herewith without notification or prior agreement.

E-mail: sales@rubbermanufact.com Http://www.rubbermanufact.com TeL:+86 18005162255
Nanjing YuHangrubber company limited in China Jiangshu