宇航橡胶 YuHang Rubber RUBBER

南京宇航橡胶有限公司
NANJING YUHANG RUBBER CO.LTD

Manufacturers · Designers · Distributors

Rubber P Extrusion

Product Code: RC01107

Reference: RC10050

Material: EPDM

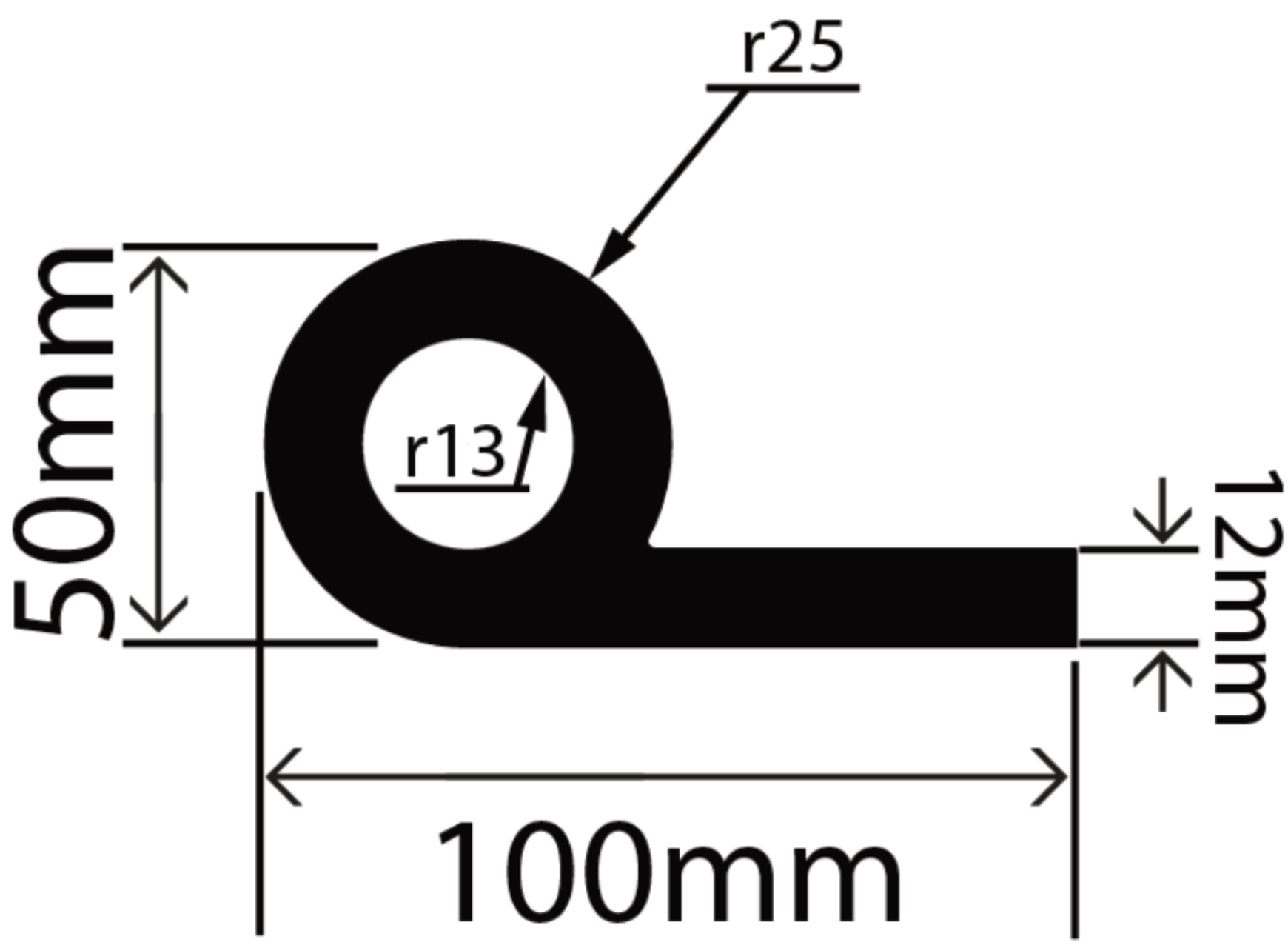

Measurements:

Bead Diameter
Ø50mm

The information contained on this product information sheet is to be used as guidance. The advice is given in good faith and does not constitute any guarantee or recommendation for suitability. The Rubber Company cannot be held liable for any damage caused by incorrect installation. We hereby reserve the right to change the technical information herewith without notification or prior agreement.

E-mail: sales@rubbermanufact.com Http://www.rubbermanufact.com TeL:+86 18005162255

Nanjing YuHangrubber company limited in China Jiangshu

Technical Data

Specification	Value
Hardness	65-75 IRHD
Tensile Strength	10 MPA
Elongation at break	500%
Tear Strength	50 kN/M
Compression Set (22 hours at 70°C)	21%
Ozone Resistance (72 hours at 40°C, 22PPHM, EXT)	No Cracks
Ages 70 hours at 70°C Hardness Change	0 IRHD
Tensile Change	+ 9%
Elongation at break	0%

ISO 9001 : 2015 REGISTERED

The information contained on this product information sheet is to be used as guidance. The advice is given in good faith and does not constitute any guarantee or recommendation for suitability. The Rubber Company cannot be held liable for any damage caused by incorrect installation. We hereby reserve the right to change the technical information herewith without notification or prior agreement.

E-mail: sales@rubbermanufact.com Http://www.rubbermanufact.com TeL:+86 18005162255
Nanjing YuHangrubber company limited in China Jiangshu