宇航橡胶
YuHang Rubber
RUBBER

南京宇航橡胶有限公司
NANJING YUHANG RUBBER CO.LTD

Manufacturers · Designers · Distributors

Neoprene Sponge Profile 15mm Hollow Quarter Circle

Product Code: RC-S014

Material: Neoprene Sponge	Tolerance BS 3734 Class E3

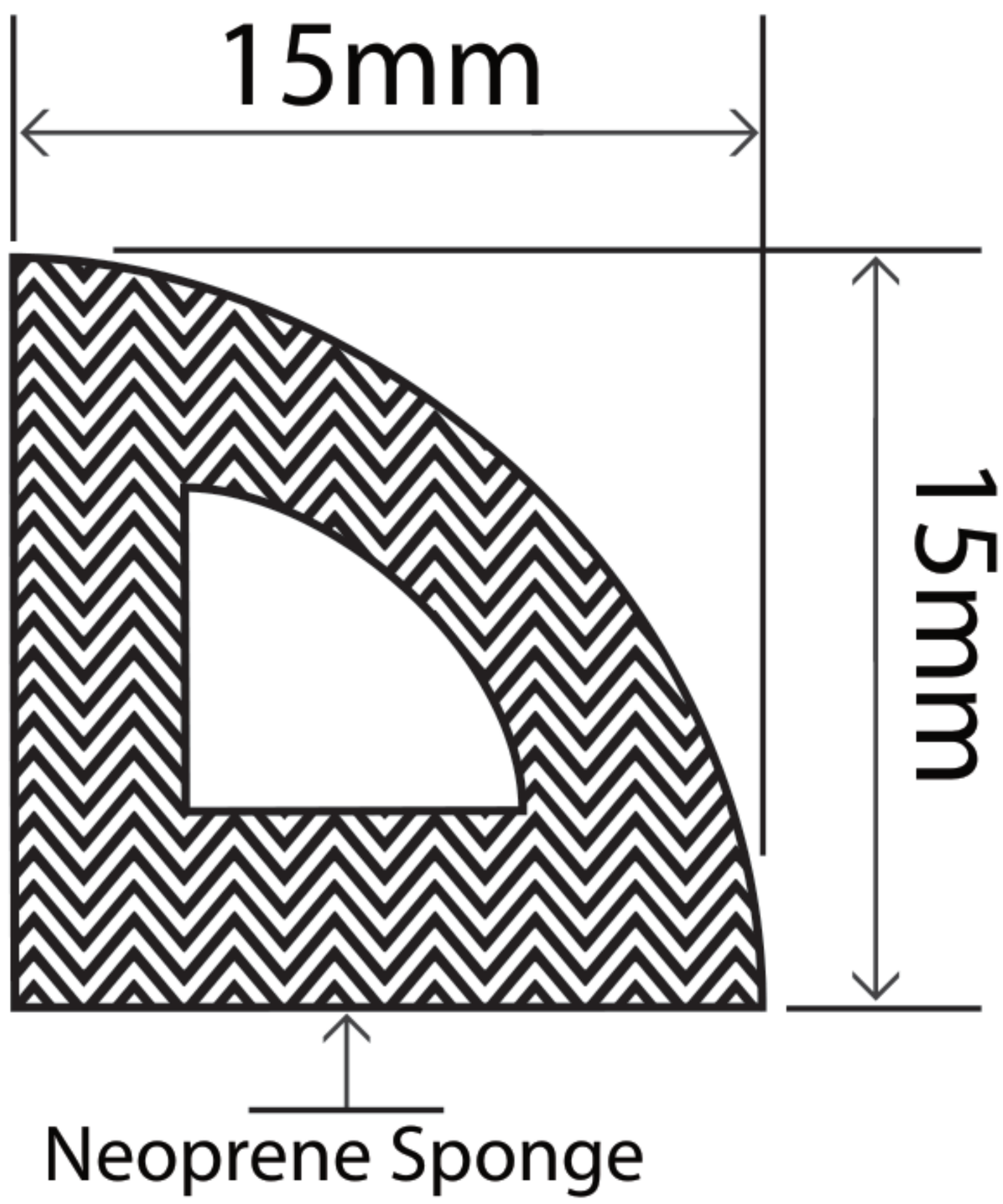

Details:

1. Sold by either the coil or the metre
2. This product's coil length is 100 metres
3. This product's weight per metre is 0.07 kg
4. This product is made of a flexible sponge material therefore sizes are approximations.

The information contained on this product information sheet is to be used as guidance. The advice is given in good faith and does not constitute any guarantee or recommendation for suitability. The Rubber Company cannot be held liable for any damage caused by incorrect installation. We hereby reserve the right to change the technical information herewith without notification or prior agreement.

E-mail: sales@rubbermanufact.com Http://www.rubbermanufact.com TeL:+86 18005162255

Nanjing YuHangrubber company limited in China Jiangshu

Technical Data

Specification	Value
Material	Neoprene Sponge
Density Range	0.5 - 0.9 gm/cm³
Oven Ageing (7 days, 70°C)	±30%
Water Absorption	5% Maximum
Compression (24 hours recovery)	25% Maximum
Oil Swell - Fuel B, 7 days weight change	150% Maximum
Low Temperature Flexibility (-40°C)	Pass
Resistance to Crystallizing	Excellent
Fire Resistance	Good

ISO 9001 : 2015 REGISTERED

The information contained on this product information sheet is to be used as guidance. The advice is given in good faith and does not constitute any guarantee or recommendation for suitability. The Rubber Company cannot be held liable for any damage caused by incorrect installation. We hereby reserve the right to change the technical information herewith without notification or prior agreement.

E-mail: sales@rubbermanufact.com Http://www.rubbermanufact.com TeL:+86 18005162255
Nanjing YuHangrubber company limited in China Jiangshu