宇航橡胶
YuHang Rubber
RUBBER

南京宇航橡胶有限公司
NANJING YUHANG RUBBER CO.LTD

Manufacturers · Designers · Distributors

EPDM Sponge Profile 26mm D-section

Product Code: RC-S006

Material: Black EPDM Sponge	Tolerance BS 3734 Class E3

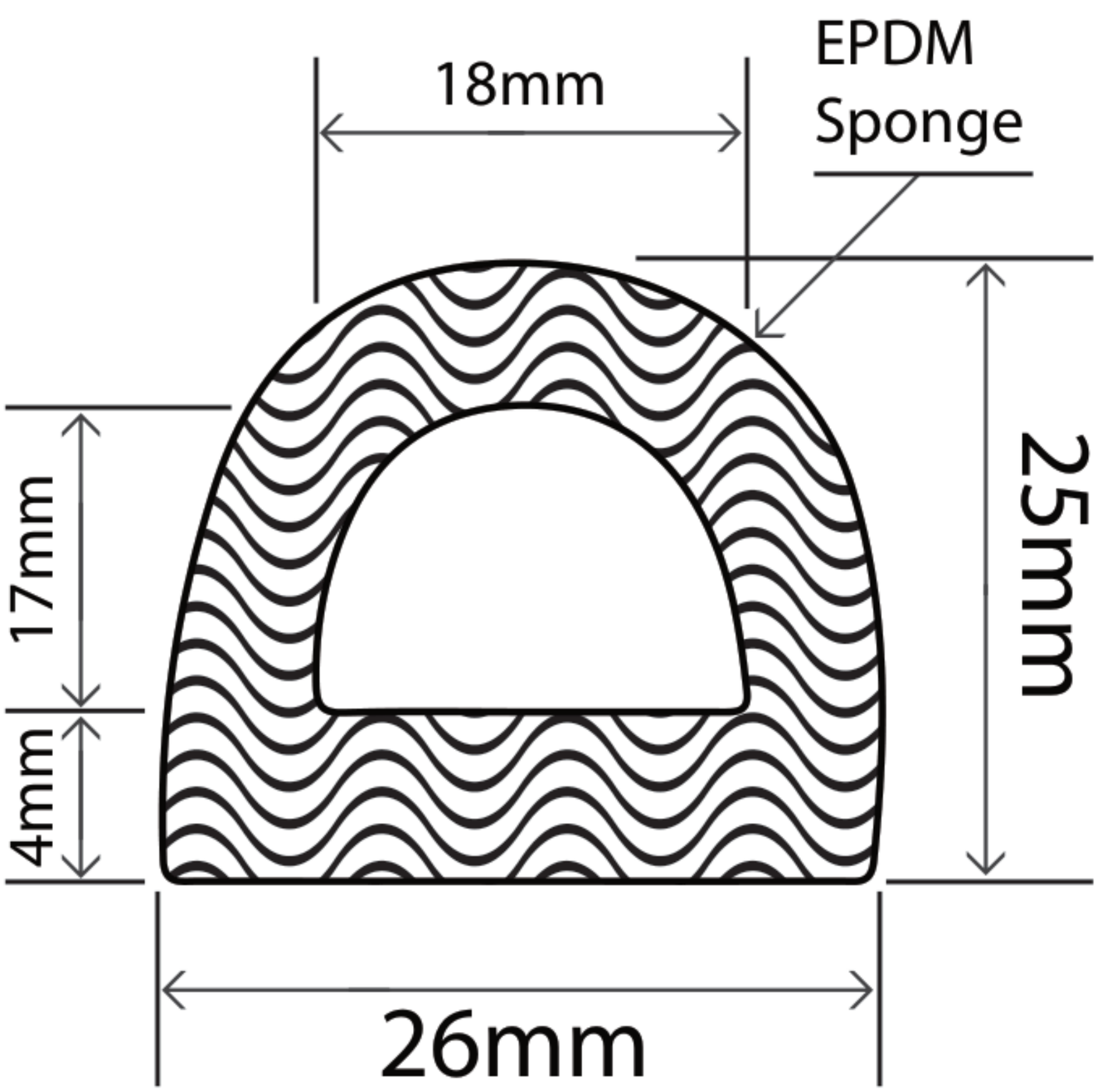

Details:

1. Sold by either the coil or the metre
2. This product's coil length is 25 metres
3. This product's weight per metre is 0.18 kg
4. This product is made of a flexible sponge material therefore sizes are approximations.

The information contained on this product information sheet is to be used as guidance. The advice is given in good faith and does not constitute any guarantee or recommendation for suitability. The Rubber Company cannot be held liable for any damage caused by incorrect installation. We hereby reserve the right to change the technical information herewith without notification or prior agreement.

E-mail: sales@rubbermanufact.com Http://www.rubbermanufact.com TeL:+86 18005162255

Nanjing YuHangrubber company limited in China Jiangshu

Technical Data

Specification	Value
Material	EPDM Sponge
Density Range	0.5 - 0.9 gm/cm³
Oven Ageing (7 days, 70°C)	±30%
Water Absorption	5% Maximum
Compression (24 hours recovery)	25% Maximum
Ozone Resistance	Excellent
Weather Resistance	Excellent
Low Temperature Flexibility (-40°C)	Pass
UV Light Resistance	Excellent
Mould Growth Resistance	Very Good

QMS ISO 9001 : 2015 REGISTERED

The information contained on this product information sheet is to be used as guidance. The advice is given in good faith and does not constitute any guarantee or recommendation for suitability. The Rubber Company cannot be held liable for any damage caused by incorrect installation. We hereby reserve the right to change the technical information herewith without notification or prior agreement.

E-mail: sales@rubbermanufact.com Http://www.rubbermanufact.com TeL:+86 18005162255
Nanjing YuHangrubber company limited in China Jiangshu