宇航橡胶
YuHang Rubber
RUBBER

南京宇航橡胶有限公司
NANJING YUHANG RUBBER CO.LTD

Manufacturers · Designers · Distributors

Rubber P Extrusion

Product Code: RC01107

Reference: RC-I2019

Material: EPDM

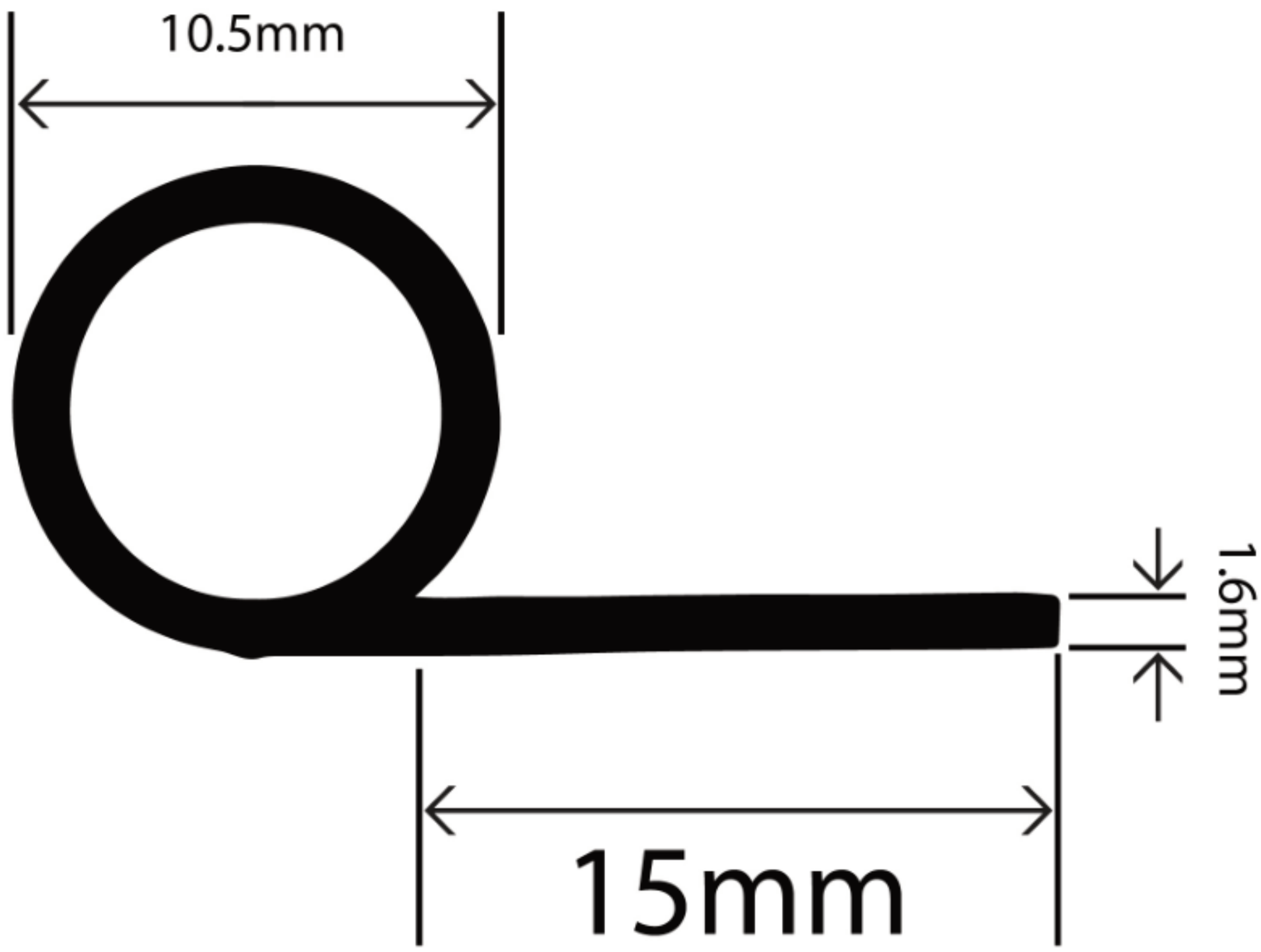

Measurements:

Bead Diameter
Ø10.5mm

The information contained on this product information sheet is to be used as guidance. The advice is given in good faith and does not constitute any guarantee or recommendation for suitability. The Rubber Company cannot be held liable for any damage caused by incorrect installation. We hereby reserve the right to change the technical information herewith without notification or prior agreement.

E-mail: sales@rubbermanufact.com Http://www.rubbermanufact.com TeL:+86 18005162255

Nanjing YuHangrubber company limited in China Jiangshu

Material Specification

Properties	Values
Polymer	EPDM
Hardness (IRHD)	65-75 +/- 5°
Tensile Strength	10.00 MPa
Elongation at Break	500%
Tear Strength	50 kn/m
Compression Set (22hrs @ 70°C)	21%
Ozone Resistance (72hrs @ 40°C, 25pphm)	No Cracks
Heat Aging (70hrs @ 70°C)	
Change in Tensile Strength	+9%
Change in Elongation at Break	0%

ISO 9001 : 2015 REGISTERED

The information contained on this product information sheet is to be used as guidance. The advice is given in good faith and does not constitute any guarantee or recommendation for suitability. The Rubber Company cannot be held liable for any damage caused by incorrect installation. We hereby reserve the right to change the technical information herewith without notification or prior agreement.

E-mail: sales@rubbermanufact.com Http://www.rubbermanufact.com TeL:+86 18005162255
Nanjing YuHangrubber company limited in China Jiangshu