宇航橡胶
YuHang Rubber
RUBBER

南京宇航橡胶有限公司
NANJING YUHANG RUBBER CO.LTD

Manufacturers · Designers · Distributors

Silicone Trapezium Profile - 20mm x 8mm

Product Code: RCTR20X8V

Material: Silicone	Tolerance: ISO 3302-1:2014

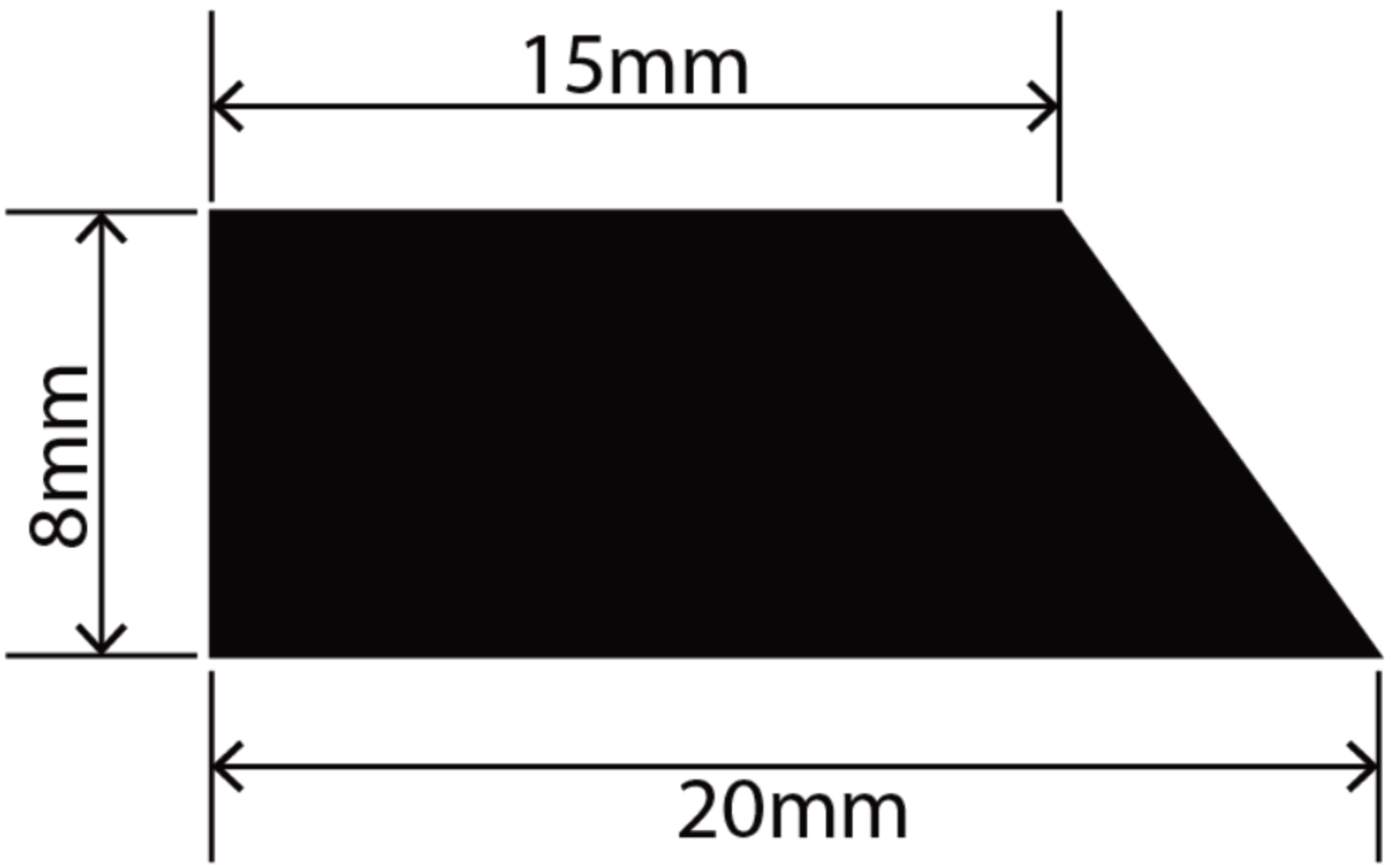

Measurements:

Height	Width
8mm	20mm

The information contained on this product information sheet is to be used as guidance. The advice is given in good faith and does not constitute any guarantee or recommendation for suitability. The Rubber Company cannot be held liable for any damage caused by incorrect installation. We hereby reserve the right to change the technical information herewith without notification or prior agreement.

E-mail: sales@rubbermanufact.com Http://www.rubbermanufact.com TeL:+86 18005162255

Nanjing YuHangrubber company limited in China Jiangshu

Technical Data

Property	Test Method	Value
Temperature Range		-50°C to + 180°C (working) Up to 200°C (intermittent)
Appearance		Transparent
Density at 20°C	ISO 1183-1 A	Approx. 1.15 g/cm³
Hardness Shore A	DIN 53505	60
Tensile Strength	DIN 53504 S1 / ISO 37	11.00 N/mm²
Elongation at Break	DIN 53504 S 1	440%
Tear Strength	ASTM D 624 B	24 N/mm
Rebound Resilience	DIN 53512	57%
Compression Set	DIN ISO815-B (22h / 175°C)	31%

ISO 9001 : 2015 REGISTERED

The information contained on this product information sheet is to be used as guidance. The advice is given in good faith and does not constitute any guarantee or recommendation for suitability. The Rubber Company cannot be held liable for any damage caused by incorrect installation. We hereby reserve the right to change the technical information herewith without notification or prior agreement.

E-mail: sales@rubbermanufact.com Http://www.rubbermanufact.com TeL:+86 18005162255
Nanjing YuHangrubber company limited in China Jiangshu