The RUBBER company

Elastomeric Products For Industry

Experts in Rubber

Fixture Protection – 30mm Range

Profile	Ref	Material	Type	Profile	Ref	Material	Type
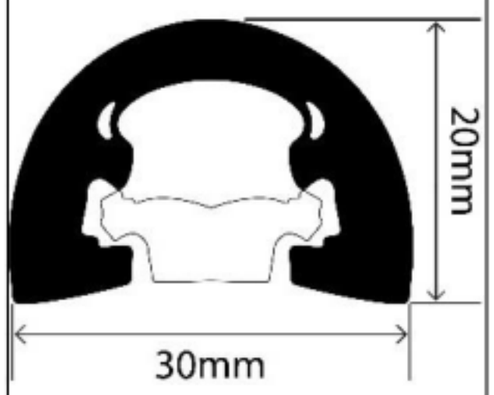	RC30DH	Dual hardness PVC	Body	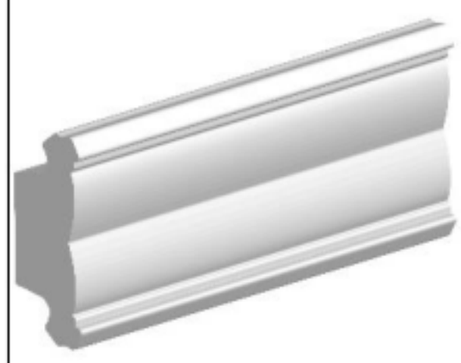	RC30RT	Rigid PVC	Track
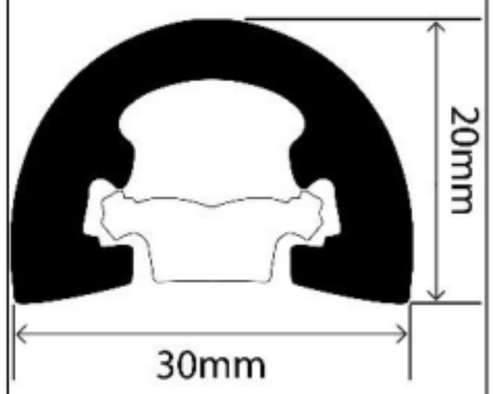	RC30F	Flexible PVC	Body	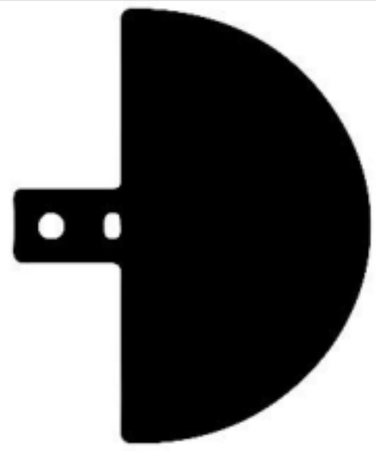	RC30M2	PP*	End Cap
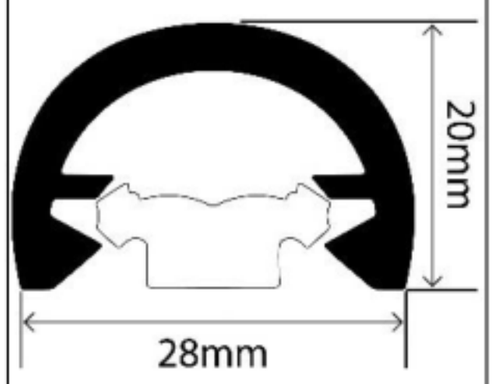	RC30R	Rigid PVC	Body	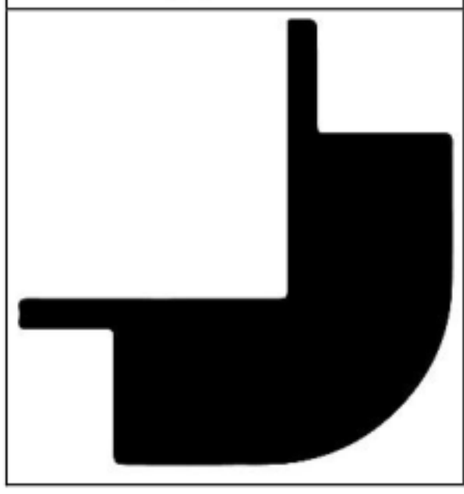	RC30M3	PP*	90° Corner

***PP = Polypropelene**

Material Options:

- **RC30DH** – Flexible dual hardness PVC which can easily bend around a 42mm radius without deformation or the need to preform.
- **RC30F** – A highly flexible PVC buffer which offers a simple and easy to install solution for a variety of protection needs.
- **RC30R** – This lightweight yet tough material offers a speedy, snap-on fit installation.

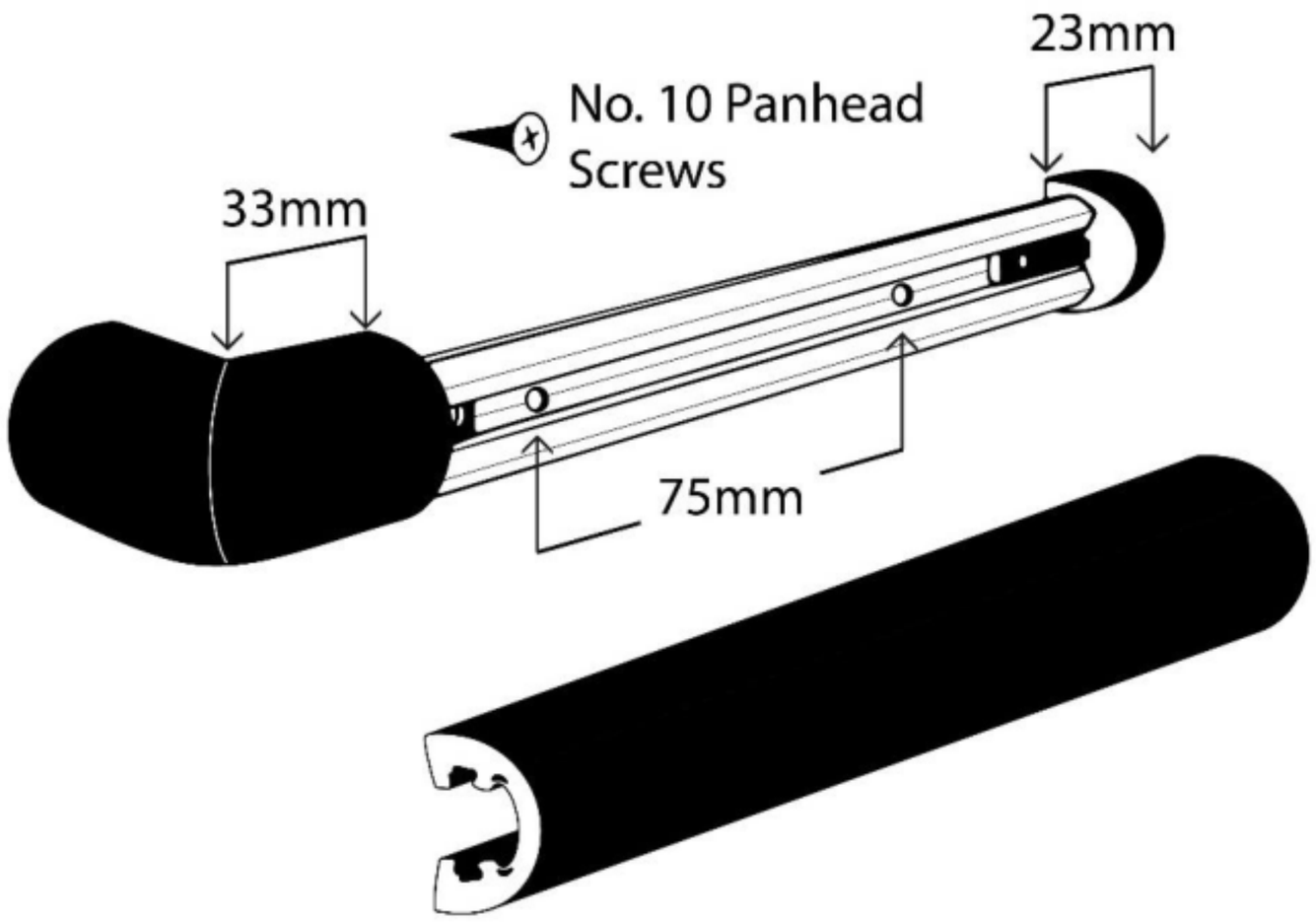

E: sales@therubbercompany.com W: www.therubbercompany.com

The information contained on this product information sheet is to be used as guidance. The advice is given in good faith and does not constitute any guarantee or recommendation for suitability. The Rubber Company cannot be held liable for any damage caused by incorrect installation. We hereby reserve the right to change the technical information herewith without notification or prior agreement.